Cambridge International AS & A Level

Cambridge International Examinations
Cambridge International Advanced Subsidiary and Advanced Level

CANDIDATE NAME	
CENTRE NUMBER	
CANDIDATE NUMBER	

9337108940

PHYSICS **9702/22**

Paper 2 AS Level Structured Questions **October/November 2018**

1 hour 15 minutes

Candidates answer on the Question Paper.

No Additional Materials are required.

READ THESE INSTRUCTIONS FIRST

Write your Centre number, candidate number and name on all the work you hand in.
Write in dark blue or black pen.
You may use an HB pencil for any diagrams or graphs.
Do not use staples, paper clips, glue or correction fluid.
DO **NOT** WRITE IN ANY BARCODES.

Answer **all** questions.

Electronic calculators may be used.
You may lose marks if you do not show your working or if you do not use appropriate units.

At the end of the examination, fasten all your work securely together.
The number of marks is given in brackets [ ] at the end of each question or part question.

This document consists of **15** printed pages and **1** blank page.

© UCLES 2018

CAMBRIDGE International Examinations

Data

speed of light in free space	$c = 3.00 \times 10^{8}\,\text{m s}^{-1}$
permeability of free space	$\mu_0 = 4\pi \times 10^{-7}\,\text{H m}^{-1}$
permittivity of free space	$\varepsilon_0 = 8.85 \times 10^{-12}\,\text{F m}^{-1}$
	$(\frac{1}{4\pi\varepsilon_0} = 8.99 \times 10^{9}\,\text{m F}^{-1})$
elementary charge	$e = 1.60 \times 10^{-19}\,\text{C}$
the Planck constant	$h = 6.63 \times 10^{-34}\,\text{J s}$
unified atomic mass unit	$1\,\text{u} = 1.66 \times 10^{-27}\,\text{kg}$
rest mass of electron	$m_e = 9.11 \times 10^{-31}\,\text{kg}$
rest mass of proton	$m_p = 1.67 \times 10^{-27}\,\text{kg}$
molar gas constant	$R = 8.31\,\text{J K}^{-1}\,\text{mol}^{-1}$
the Avogadro constant	$N_A = 6.02 \times 10^{23}\,\text{mol}^{-1}$
the Boltzmann constant	$k = 1.38 \times 10^{-23}\,\text{J K}^{-1}$
gravitational constant	$G = 6.67 \times 10^{-11}\,\text{N m}^2\,\text{kg}^{-2}$
acceleration of free fall	$g = 9.81\,\text{m s}^{-2}$

© UCLES 2018

Formulae

uniformly accelerated motion	$s = ut + \frac{1}{2}at^2$ $v^2 = u^2 + 2as$
work done on/by a gas	$W = p\Delta V$
gravitational potential	$\phi = -\frac{Gm}{r}$
hydrostatic pressure	$p = \rho gh$
pressure of an ideal gas	$p = \frac{1}{3}\frac{Nm}{V}\langle c^2 \rangle$
simple harmonic motion	$a = -\omega^2 x$
velocity of particle in s.h.m.	$v = v_0 \cos \omega t$ $v = \pm \omega \sqrt{(x_0^2 - x^2)}$
Doppler effect	$f_o = \frac{f_s v}{v \pm v_s}$
electric potential	$V = \frac{Q}{4\pi\varepsilon_0 r}$
capacitors in series	$1/C = 1/C_1 + 1/C_2 + \ldots$
capacitors in parallel	$C = C_1 + C_2 + \ldots$
energy of charged capacitor	$W = \frac{1}{2}QV$
electric current	$I = Anvq$
resistors in series	$R = R_1 + R_2 + \ldots$
resistors in parallel	$1/R = 1/R_1 + 1/R_2 + \ldots$
Hall voltage	$V_H = \frac{BI}{ntq}$
alternating current/voltage	$x = x_0 \sin \omega t$
radioactive decay	$x = x_0 \exp(-\lambda t)$
decay constant	$\lambda = \frac{0.693}{t_{\frac{1}{2}}}$

© UCLES 2018

[Turn over

Answer **all** the questions in the spaces provided.

1 A golfer strikes a ball so that it leaves horizontal ground with a velocity of $6.0\,m\,s^{-1}$ at an angle θ to the horizontal, as illustrated in Fig. 1.1.

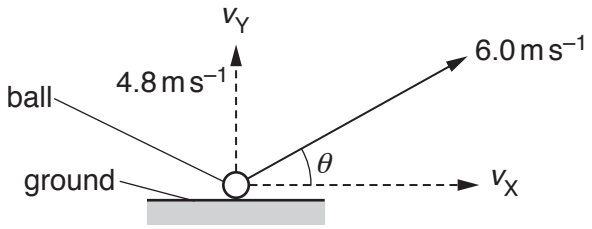

Fig. 1.1 (not to scale)

The magnitude of the initial vertical component v_Y of the velocity is $4.8\,m\,s^{-1}$.
Assume that air resistance is negligible.

(a) Show that the magnitude of the initial horizontal component v_X of the velocity is $3.6\,m\,s^{-1}$.

[1]

© UCLES 2018

(b) The ball leaves the ground at time $t = 0$ and reaches its maximum height at $t = 0.49$ s.

On Fig. 1.2, sketch separate lines to show the variation with time t, until the ball returns to the ground, of

(i) the vertical component v_Y of the velocity (label this line Y), [2]

(ii) the horizontal component v_X of the velocity (label this line X). [2]

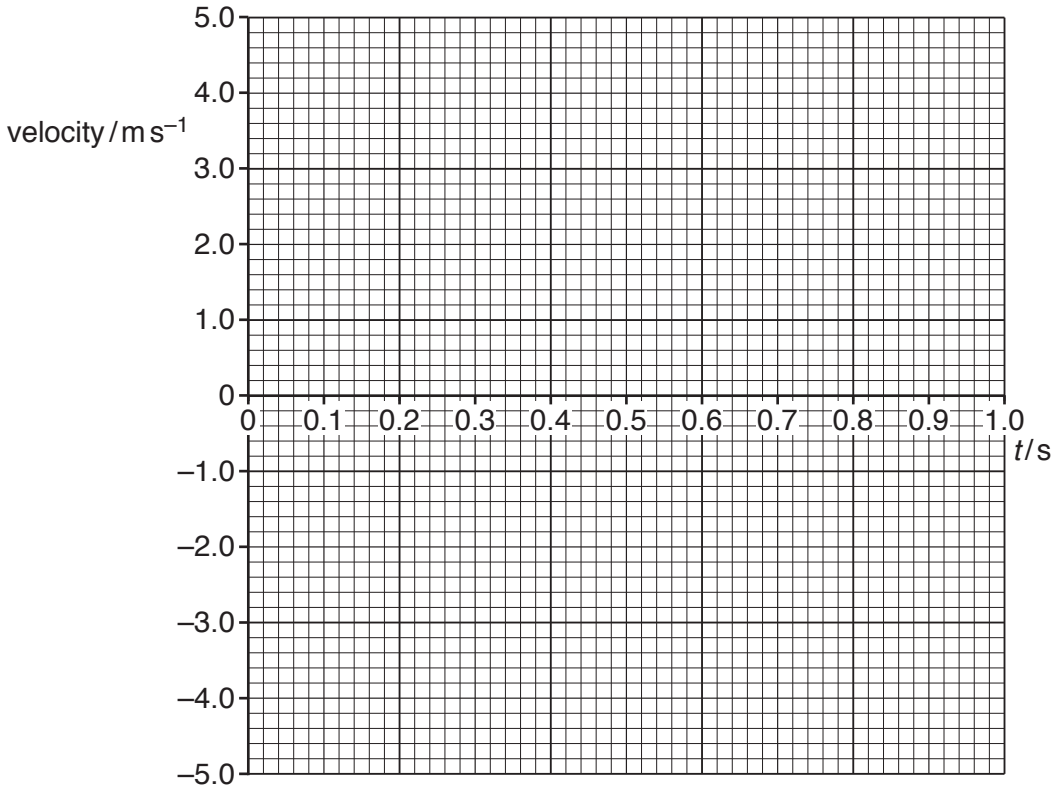

Fig. 1.2

(c) Calculate the maximum height reached by the ball.

maximum height = ... m [2]

(d) For the movement of the ball from the ground to its maximum height, determine the ratio

$$\frac{\text{kinetic energy at maximum height}}{\text{change in gravitational potential energy}}.$$

ratio = ...[4]

(e) In practice, significant air resistance acts on the ball. Explain why the actual time taken for the ball to reach maximum height is less than the time calculated when air resistance is assumed to be negligible.

.....

.....

.....[1]

[Total: 12]

© UCLES 2018

2 **(a)** The kilogram, metre and second are all SI base units.

State two other SI base units.

1. .....

2. .....
[2]

(b) A uniform beam AB of length 6.0 m is placed on a horizontal surface and then tilted at an angle of 31° to the horizontal, as shown in Fig. 2.1.

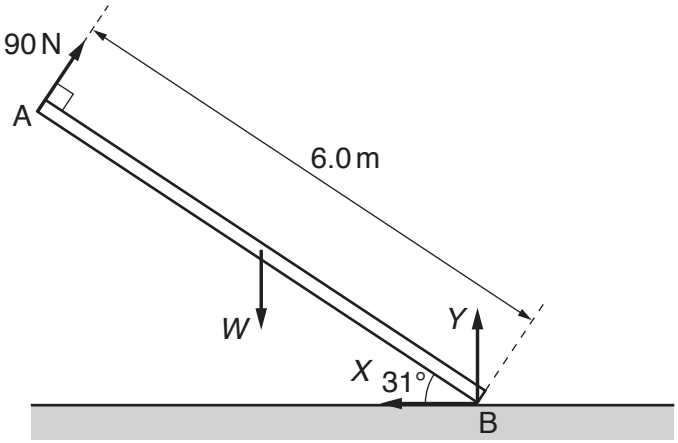

Fig. 2.1 (not to scale)

The beam is held in equilibrium by four forces that all act in the same plane. A force of 90 N acts perpendicular to the beam at end A. The weight *W* of the beam acts at its centre of gravity. A vertical force *Y* and a horizontal force *X* both act at end B of the beam.

(i) State the name of force *X*.

.....[1]

(ii) By taking moments about end B, calculate the weight *W* of the beam.

W = ... N [2]

(iii) Determine the magnitude of force *X*.

magnitude of force *X* = ... N [1]

[Total: 6]

3 **(a)** State the principle of conservation of momentum.

.....

.....

.....[2]

(b) The propulsion system of a toy car consists of a propeller attached to an electric motor, as illustrated in Fig. 3.1.

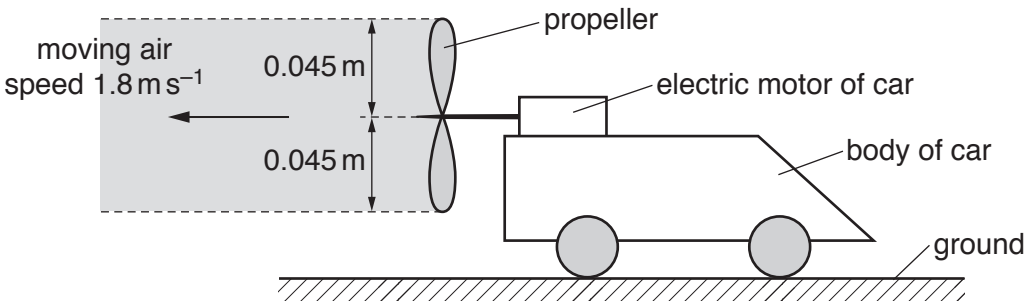

Fig. 3.1

The car is on horizontal ground and is initially held at rest by its brakes. When the motor is switched on, it rotates the propeller so that air is propelled horizontally to the left. The density of the air is 1.3 kg m^{-3}.

Assume that the air moves with a speed of 1.8 m s^{-1} in a uniform cylinder of radius 0.045 m. Also assume that the air to the right of the propeller is stationary.

(i) Show that, in a time interval of 2.0 s, the mass of air propelled to the left is 0.030 kg.

[2]

© UCLES 2018

(ii) Calculate

1. the increase in the momentum of the mass of air in **(b)(i)**,

increase in momentum = ... N s

2. the force exerted on this mass of air by the propeller.

force = ... N
[3]

(iii) Explain how Newton's third law applies to the movement of the air by the propeller.

.....

.....

.....[2]

(iv) The total mass of the car is 0.20 kg. The brakes of the car are released and the car begins to move with an initial acceleration of 0.075 m s^{-2}.

Determine the initial frictional force acting on the car.

frictional force = ... N [2]

[Total: 11]

4 **(a)** Sound waves are longitudinal waves. By reference to the direction of propagation of energy, state what is meant by a *longitudinal* wave.

.....

.....[1]

(b) A stationary sound wave in air has amplitude A. In an experiment, a detector is used to determine A^2. The variation of A^2 with distance x along the wave is shown in Fig. 4.1.

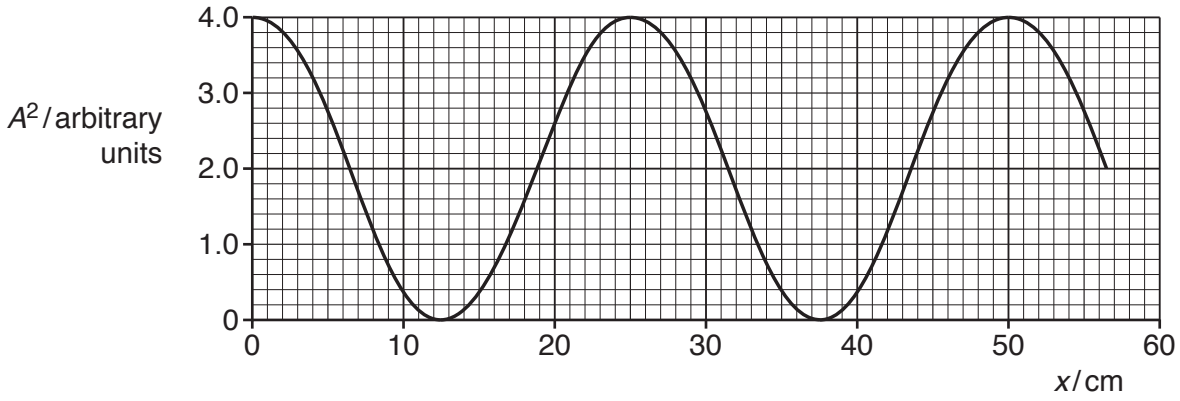

Fig. 4.1

(i) State the phase difference between the vibrations of an air particle at $x = 25\,\text{cm}$ and the vibrations of an air particle at $x = 50\,\text{cm}$.

phase difference = ... ° [1]

(ii) The speed of the sound in the air is $330\,\text{m s}^{-1}$. Determine the frequency of the sound wave.

frequency = ... Hz [3]

(iii) Determine the ratio

$$\frac{\text{amplitude } A \text{ of wave at } x = 20\,\text{cm}}{\text{amplitude } A \text{ of wave at } x = 25\,\text{cm}}.$$

ratio = ...[2]

[Total: 7]

© UCLES 2018

5 Red light of wavelength 640 nm is incident normally on a diffraction grating having a line spacing of 1.7×10^{-6} m, as shown in Fig. 5.1.

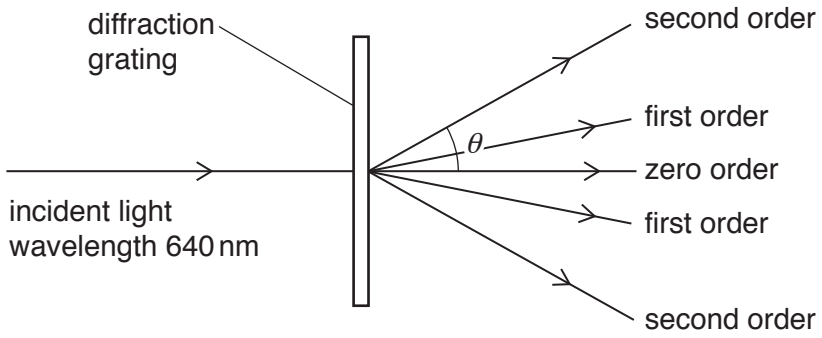

Fig. 5.1 (not to scale)

The second order diffraction maximum of the light is at an angle θ to the direction of the incident light.

(a) Show that angle θ is 49°.

[3]

(b) Determine a different wavelength of **visible** light that will also produce a diffraction maximum at an angle of 49°.

wavelength = ... m [2]

[Total: 5]

© UCLES 2018

6 **(a)** Define the *volt*.

.....

.....[1]

(b) A battery of electromotive force (e.m.f.) 7.0 V and negligible internal resistance is connected in series with three components, as shown in Fig. 6.1.

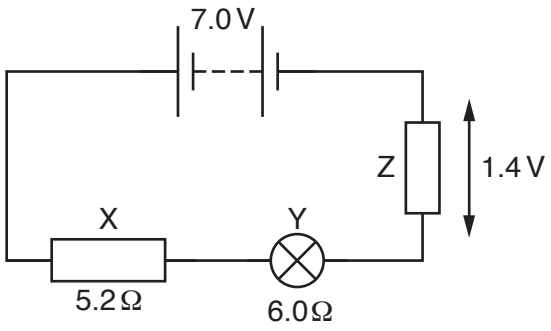

Fig. 6.1

Resistor X has a resistance of 5.2 Ω. The resistance of the filament wire of lamp Y is 6.0 Ω. The potential difference across resistor Z is 1.4 V.

(i) Calculate the current in the circuit.

current = ... A [2]

(ii) Determine the resistance of resistor Z.

resistance = ... Ω [1]

(iii) Calculate the percentage efficiency with which the battery supplies power to the lamp.

efficiency = ... % [3]

© UCLES 2018

(iv) The filament wire of the lamp is made of metal of resistivity $3.7 \times 10^{-7}\,\Omega\,\text{m}$ at its operating temperature in the circuit.

Determine, for the filament wire, the value of α where

$$\alpha = \frac{\text{cross-sectional area}}{\text{length}}.$$

α = ... m [2]

[Total: 9]

7 **(a)** The current I in a metal wire is given by the expression

$$I = Anve.$$

State what is meant by the symbols A and n.

A: .....

n: .....

[2]

(b) The diameter of a wire XY varies linearly with distance along the wire as shown in Fig. 7.1.

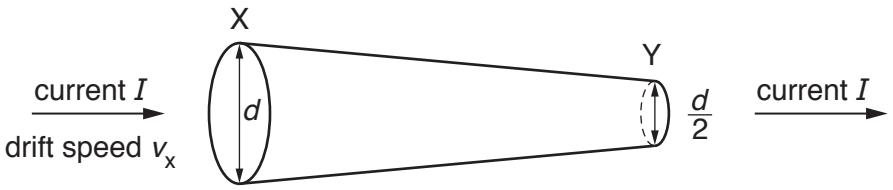

Fig. 7.1

There is a current I in the wire. At end X of the wire, the diameter is d and the average drift speed of the free electrons is v_x. At end Y of the wire, the diameter is $\frac{d}{2}$.

On Fig. 7.2, sketch a graph to show the variation of the average drift speed with position along the wire between X and Y.

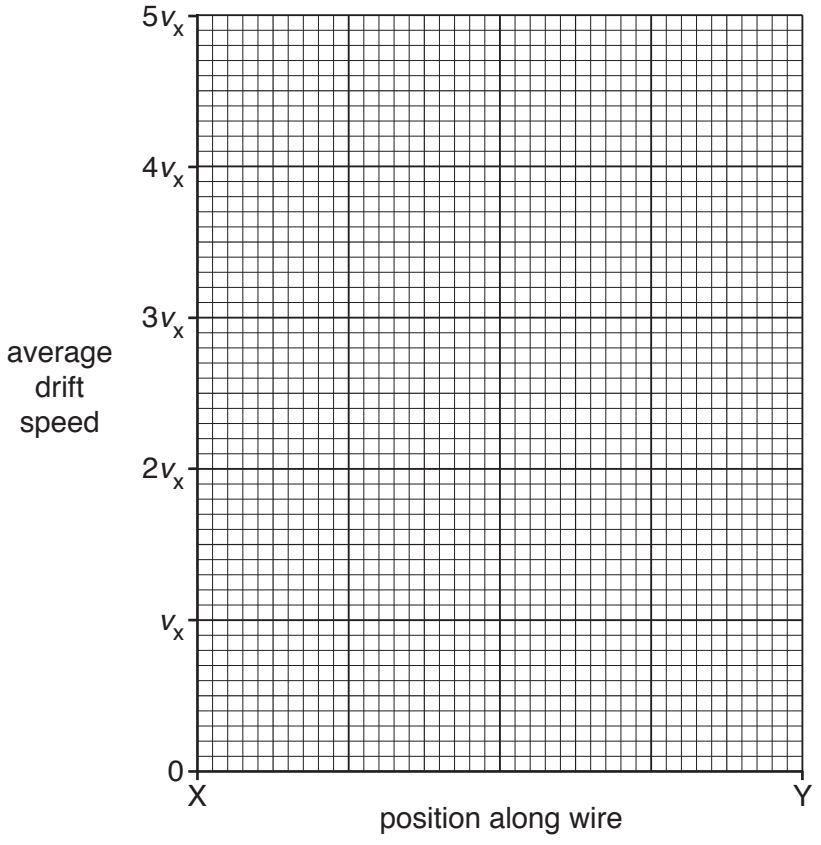

Fig. 7.2

[2]

[Total: 4]

© UCLES 2018

8 **(a)** In the following list, underline all particles that are leptons.

antineutrino positron proton quark [1]

(b) A stationary nucleus of magnesium-27, $^{27}_{12}Mg$, decays by emitting a β^- particle and γ radiation. An incomplete equation to represent this decay is

$$^{27}_{12}Mg \longrightarrow X + \beta^- + \gamma.$$

(i) State the nucleon number and the proton number of nucleus X.

nucleon number = ...

proton number = ...
[2]

(ii) State the name of the interaction that gives rise to this decay.

.....[1]

(iii) State **two** possible reasons why the sum of the kinetic energy of the β^- particle and the energy of the γ radiation is less than the total energy released during the decay of the magnesium nucleus.

1. .....

.....

2. .....

.....
[2]

[Total: 6]

© UCLES 2018

BLANK PAGE

Permission to reproduce items where third-party owned material protected by copyright is included has been sought and cleared where possible. Every reasonable effort has been made by the publisher (UCLES) to trace copyright holders, but if any items requiring clearance have unwittingly been included, the publisher will be pleased to make amends at the earliest possible opportunity.

To avoid the issue of disclosure of answer-related information to candidates, all copyright acknowledgements are reproduced online in the Cambridge International Examinations Copyright Acknowledgements Booklet. This is produced for each series of examinations and is freely available to download at www.cie.org.uk after the live examination series.

Cambridge International Examinations is part of the Cambridge Assessment Group. Cambridge Assessment is the brand name of University of Cambridge Local Examinations Syndicate (UCLES), which is itself a department of the University of Cambridge.